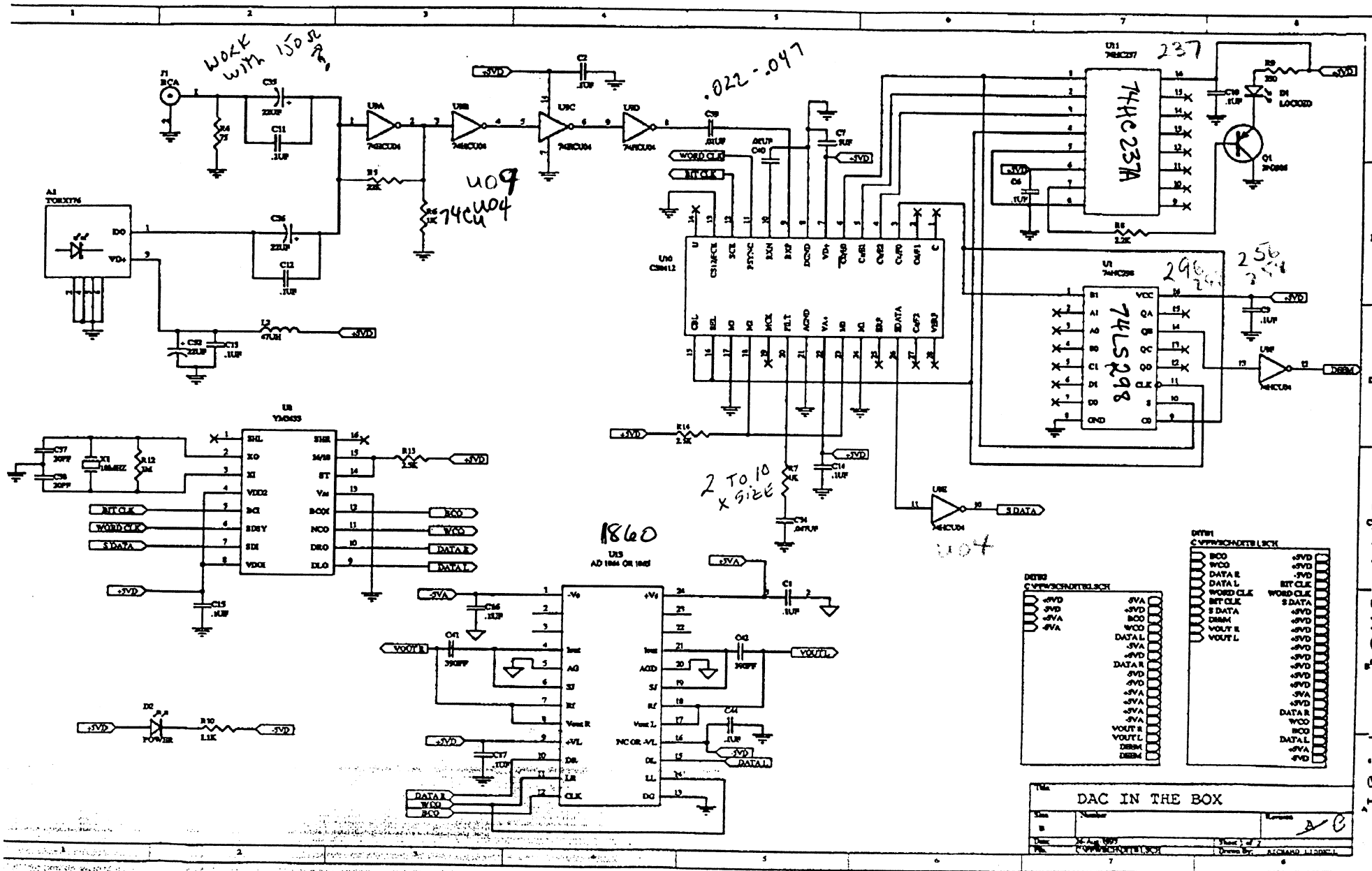

1-94 TUE 12:09 AUDIO ALCHEMY, INC. P.01

Tip =
Ring = -16V
base = G = BLK

1 G 0

1 G 0

← 78 = Flat surface = tab = input →

79 = Flat

"all heatsinks to rear"

G 1 0

0 1 G

10K
5.62K

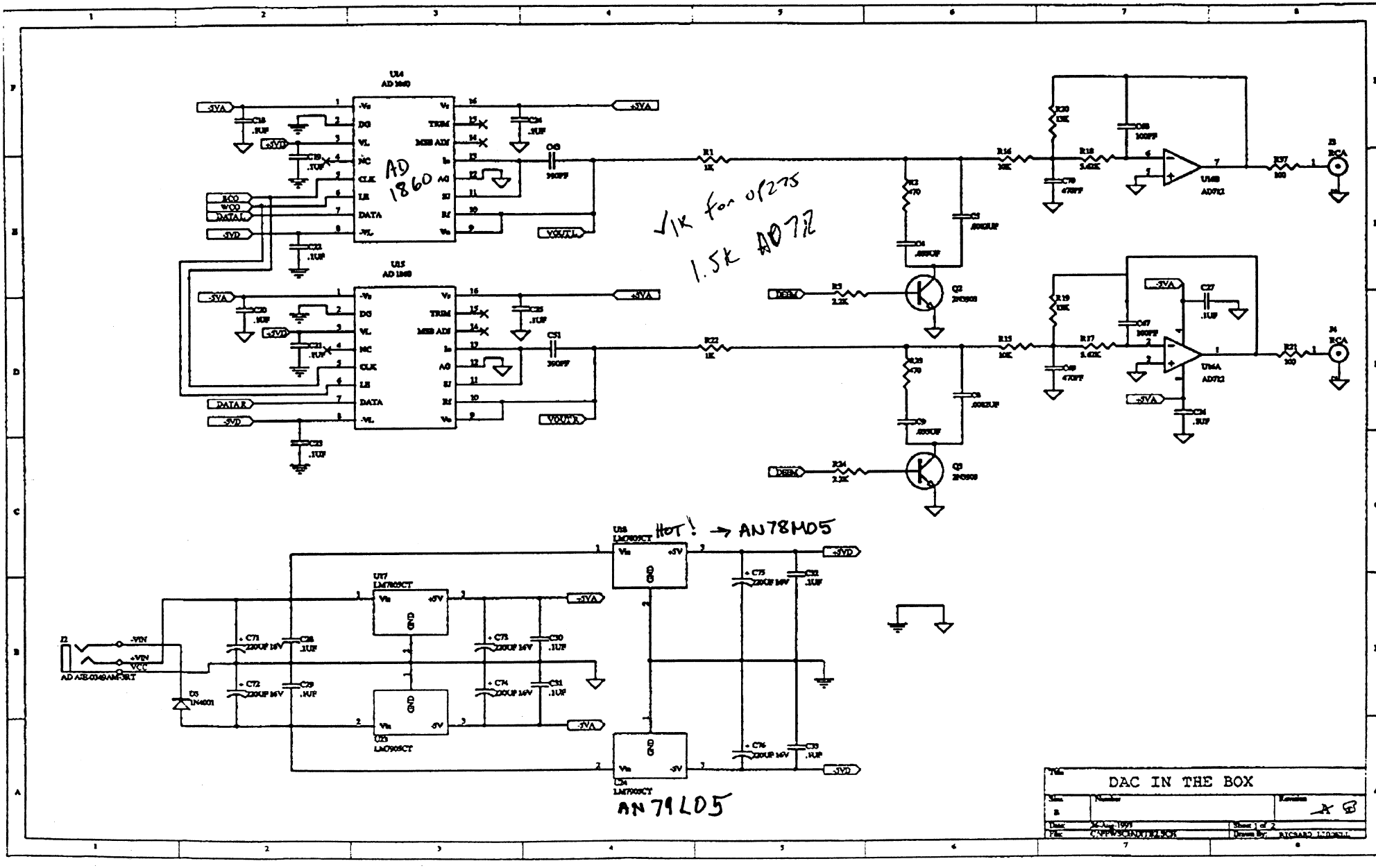

FEB-1-94 TUE 12:10 AUDIO ALCHEMY, INC. P.02